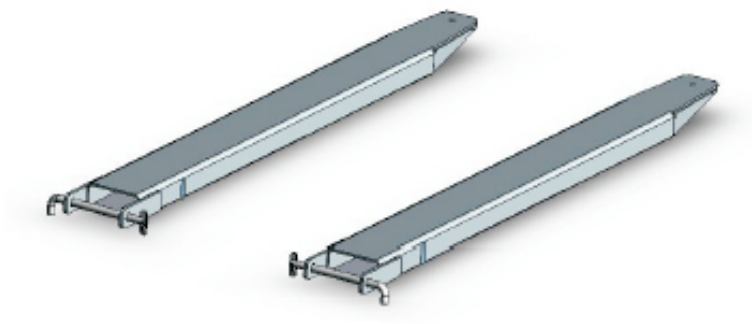

## NS-FE1-18 Fork Slipper Tyne Extensions 56Kg Weight

Designed for ease of operation with a slim profile to extend the versatility of your Lift Truck. These Slippers have been designed and manufactured in accordance with AS 2359.15.

Fork Slipper Tyne Extensions are devices that fit over a standard pair of fork tynes on a forklift truck, for the sole purpose of temporarily lengthening the fork tynes, for load stabilization only.

Please Note: When using Fork Slipper Tyne Extensions, great care must be taken to ensure that they are used only for load stabilizing purposes only (and not used for carrying the load). In accordance with AS2359.15 fork slippers used for general usage should be no longer than 167% of the supporting tine's length.

Note: It is important that the load on the Fork Slipper Tyne Extension is uniform and that it is not carried without full support of the appropriate fork tyne.

| Features | Specifications |
|---|---|
| Length (mm) | 1780 |
| To Suit Max Tine Size (mm) | 100 x 45 |
| To Suit Min Tine Size (mm) | 1080 |
| Weight per pair (kg) | 56 |
| Horizontal Centre of Gravity (mm) | 824 |
| SWL per Pair at 600mm L/C (kg) | 6 |

## SPECIFICATIONS:

- Made of High Tensile Grade Steel
- Zinc Plated for added Protection
- High Safe Working Load (SWL) Rating
- Supplied with Toggle Locking Pins
- Fitted with Rating Plate
- Supplied with Instructions

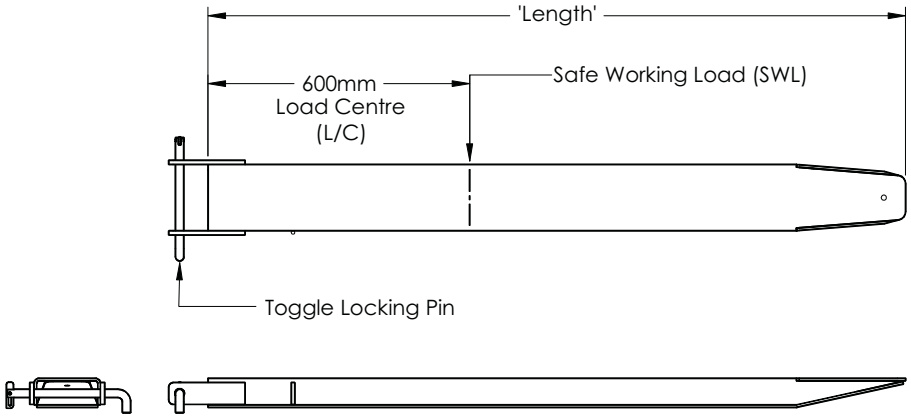


**National Sales Pty Ltd**
Phone: 1300-795512 | Fax: 02 8580-4677 | Website: www.handlinggear.com.au | Email: sales@handlinggear.com.au

SPECIFICATIONS SUBJECT TO CHANGE WITHOUT NOTICE